No	DESCRIPTION	MATERIAL	Q'TY	REMARKS
1	MU FERRULE	ZIRCONIA CERAMIC		
2	MU FLANGE	SUS303C		

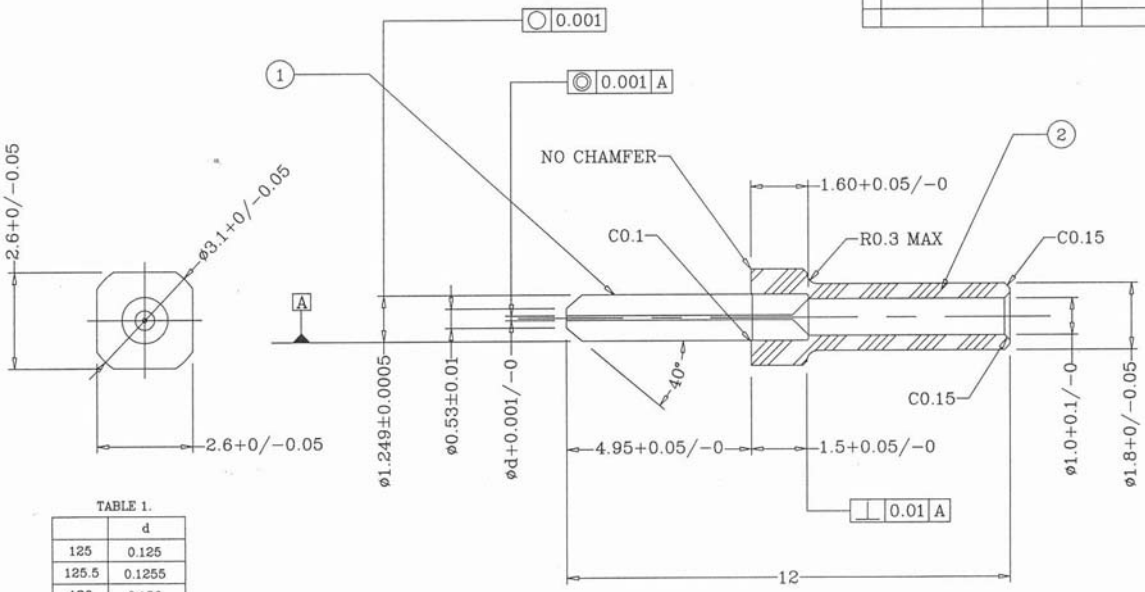

TABLE 1.

	d
125	0.125
125.5	0.1255
126	0.126

NO	Revision Particulars	Date
1		
2		
3		

PACIFIC OPTICONNECT		SCALE	8:1	SIZE	PROJECTION
		UNIT	mm	A4	
TITLE	MU WF	DATE	2001.07.01		
		DESIGN	CHECKED	REVIEWD	APPROVED
DWG NO'	DW-F-08	SIGNATURE			